IP2089EN • 2012-06-20

Ditec

VALOR R

Maintenance and Installation Manual for Sliding Doors installed in Escape Routes

(translation of the original instructions)

www.ditecautomations.com

INDEX

1. GENERAL SAFETY PRECAUTIONS

This installation manual is intended for professionally competent personnel only.
Before installing the product, carefully read the instructions.
Bad installation could be hazardous.

The packaging materials (plastic, polystyrene, etc.) should not be discarded in the environment or left within reach of children, as these are a potential source of hazard.
Before installing the product, make sure it is in perfect condition.
Do not install the product in an explosive environment and atmosphere: gas or inflammable fumes are a serious hazard risk.
Before installing the motors, make all structural changes relating to safety clearances and protection or segregation of all areas where there is risk of being crushed, cut or dragged, and danger areas in general.
Make sure the existing structure is up to standard in terms of strength and stability.
The motor manufacturer is not responsible for failure to use Good Working Methods in building the frames to be motorised or for any deformation occurring during use.
The safety devices (photocells, safety edges, emergency stops, etc.) must be installed taking into account: applicable laws and directives, Good Working Methods, installation premises, system operating logic and the forces developed by the motorised door.
Apply hazard area notices required by applicable regulations.
Each installation must clearly show the identification details of the motorised door.

2. DECLARATION OF INCORPORATION OF PARTLY COMPLETED MACHINERY

Directive 2006/42/EC, Annex II-B)
The manufacturer DITEC S.p.A. with headquarters in Via Mons. Banfi, 3 - 21042 Caronno Pertusella (VA) - ITALY

Declares that the automation for sliding doors installed in escape routes type VALOR R

- Has been constructed to be installed on a manual door to construct a machine pursuant to the directive 2006/42/EC. The manufacturer of the motorised door shall declare conformity pursuant to the directive 2006/42/EC (annex II-A), prior to the machine being put into service.
- Conforms to applicable essential safety requirements indicated in annex I, chapter 1 of the directive 2006/42/EC.
- Conforms to the Low Voltage Directive 2006/95/EC.
- Conforms to the Electromagnetic Compatibility Directive 2004/108/EC.
- Technical documentation conforms to annex VII-B to the directive 2006/42/EC.
- The technical file is managed by Renato Calza with offices in Via Mons. Banfi, 3 - 21042 Caronno Pertusella (VA) - ITALY.
- A copy of technical documentation will be provided to national competent authorities, following a suitably justified request.

Caronno Pertusella,
10-11-2010

Silvano Angaroni
(Managing Director)

2.1 Machinery directive

Pursuant to Machinery Directive (2006/42/EC) the installer who motorises a door or gate has the same obligations as the manufacturer of machinery and as such must:

- prepare the technical file which must contain the documents indicated in Annex V of the Machinery Directive; (The technical file must be kept and placed at the disposal of competent national authorities for at least ten years from the date of manufacture of the motorised door);
- draft the EC declaration of conformity in accordance with Annex II-A of the Machinery Directive and deliver it to the customer;
- affix the CE marking on the power operated door in accordance with point 1.7.3 of Annex I of the Machinery Directive.

3. TECHNICAL DATA

	VALOR LR	VALOR NR	VALOR TR
Power supply	230 V~ / 50-60 Hz	230 V~ / 50-60 Hz	230 V~ / 50-60 Hz
Absorption	1 A (1,6 A with weight > 200 kg)	1 A (1,6 A with weight > 200 kg)	1 A (1,6 A with weight > 200 kg)
Accessories power supply	24 V= / 0,5 A max	24 V= / 0,5 A max	24 V= / 0,5 A max
Max speed 1 wing	0,8 m/s	0,8 m/s	0,8 m/s
Max speed 2 wings	1,6 m/s	1,6 m/s	1,6 m/s
Intermittence	S3 = 100%	S3 = 100%	S3 = 100%
Service life *	6 - CONTINUOUS	6 - CONTINUOUS	6 - CONTINUOUS
Max. door weight 1 wing	100 kg	120 kg	200 kg
Max. door weight 2 wings	180 kg	240 kg	260 kg
Weight 1 wing (reinforced wheels)	/	150 kg	/
Weight 2 wings (reinforced wheels)	/	300 kg	/
Temperature	-15°C / +50°C	-15°C / +50°C	-15°C / +50°C
Degree of protection	IP20	IP20	IP20

* 3.1 Applications

Service life: 6 (minimum 5 years of working life with continuous use)

Applications: CONTINUOUS (For all special applications with ongoing use).

- The operating performance specifications refer to the recommended weight (about 2/3 of maximum allowed weight). Use with maximum allowed weight could reduce the above performance specifications in tecnhical data.
- The service class, operating times and number of consecutive cycles are merely approximate. These have been statistically determined in average conditions of use and are not certain for each single case.
- Each automatic entrance features variable factors such as: friction, balancing and environmental conditions that can substantially change both the duration and operating quality of the automatic entrance or part of its components (including automatic system). It is up to the installer to adopt adequate safety coefficients for each single installation.

4. STANDARD INSTALLATION

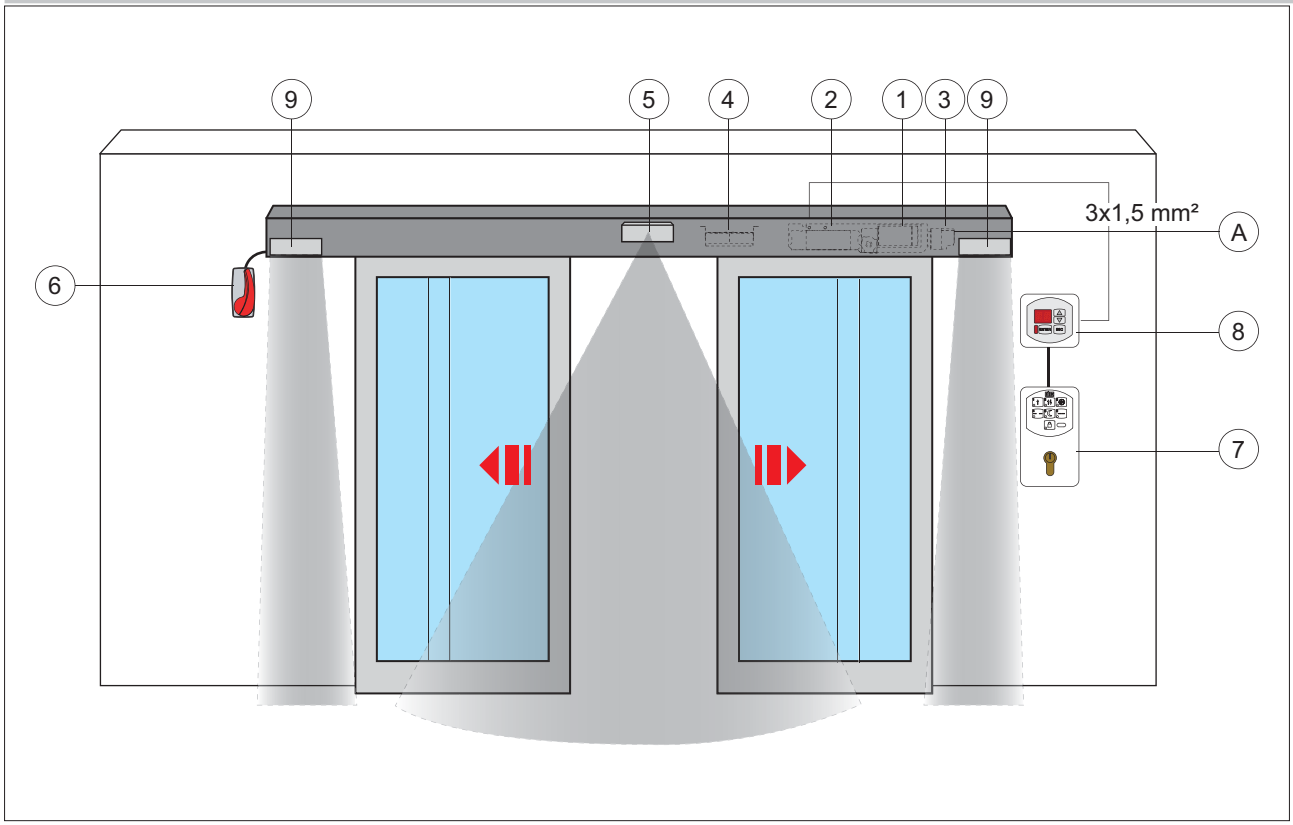

REF.	CODE	DESCRIPTION
1		Drive unit
2	EL21	Control panel
3	AL2	Power supply unit
4	VALABE	Emergency batteries (included)
5	PASAM24T*	Internal sensor, escape route approved
	PASAM24W or PASSA2	External opening + safety sensor, approved
	PASAT3 / PASAT3I or PASAT4	External safety sensor, approved
6	VALSB or LOKSB	Release handle
	VALLOKB	Bistable locking device
7	COMER* or COMKR*	Functions selector switch
8	MD1**	Display module (included)
9	PASAT3I	Opening safety sensor, approved
A		Power supply

* Code necessary for the operation as escape route, to be ordered separately.
** Code required for adjustments and diagnostics.

NOTE: The given operating and performance features can only be guaranteed with the use of DITEC accessories and safety devices.

5. INSTALLATION OF THE AUTOMATION

5.1 Box VALOR LR-NR fastening

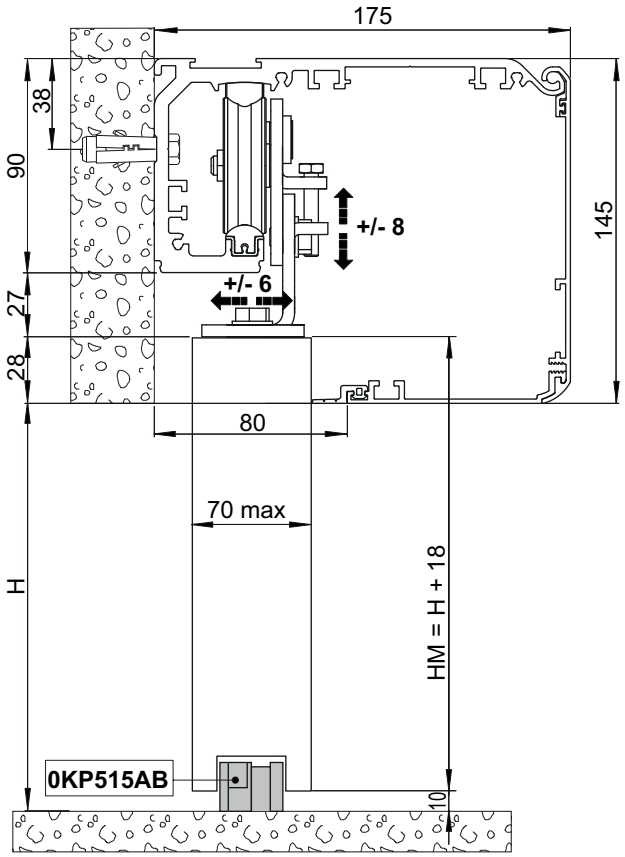

Unless otherwise specified, all measurements are expressed in millimetres (mm).
The VALOR LR-NR automation wall fixing measurements are illustrated in the diagram, considering that the door wing profiles are not of our production.
If the door wings are made with DITEC profiles of the following series: PAM16, PAM23, PAM30, PAM45, refer to the measurements in the related manuals.
Fix the box with M6 Ø12 steel plugs or 6MA screws. Distribute the fixing points approx. every 800 mm.
Make sure that the top surface of the box is perpendicular with the floor and not deformed lengthwise with the shape of the wall. If the wall is not straight and smooth, the box must be fixed to metal plates.
WARNING: The fastening of the box to the wall must be suitable in order to sustain the weight of the door wings.

5.2 Box VALOR TR fastening

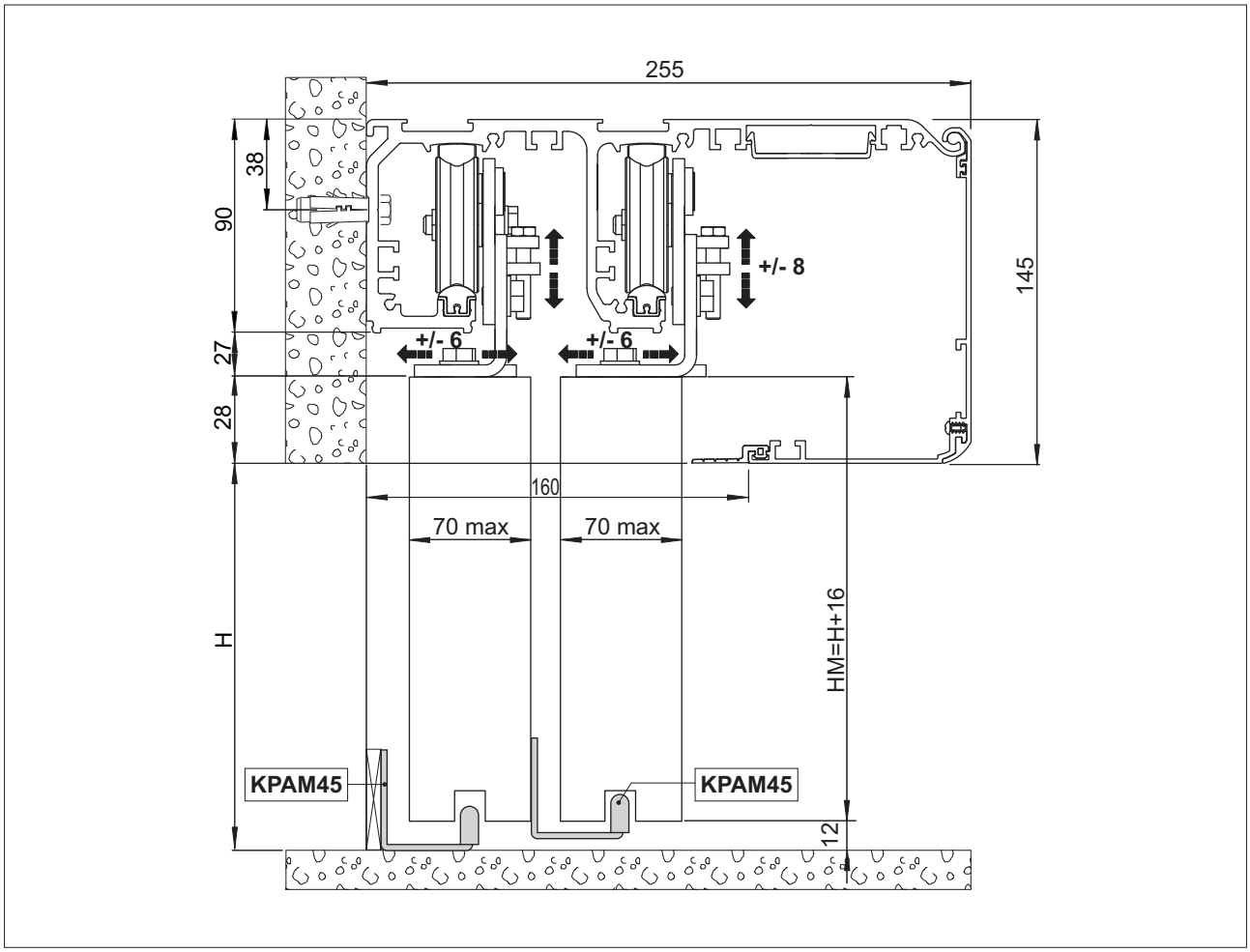

The VALOR TR automation wall fixing measurements are illustrated in the diagram, considering that the door wing profiles are not of our production.
If the door wings are made with DITEC profiles of the following series: PAM16, PAM23, PAM30, PAM45, refer to the measurements in the related manuals.
Fix the box with M6 Ø12 steel plugs or 6MA screws. Distribute the fixing points approx. every 800 mm.
Make sure that the top surface of the box is perpendicular with the floor and not deformed lengthwise with the shape of the wall. If the wall is not straight and smooth, the box must be fixed to metal plates.
WARNING: The fastening of the box to the wall must be suitable in order to sustain the weight of the door wings.

5.3 VALOR LR-NR wings installation and adjustment

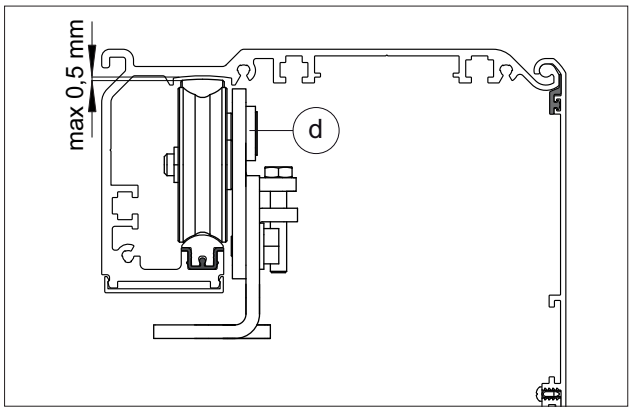

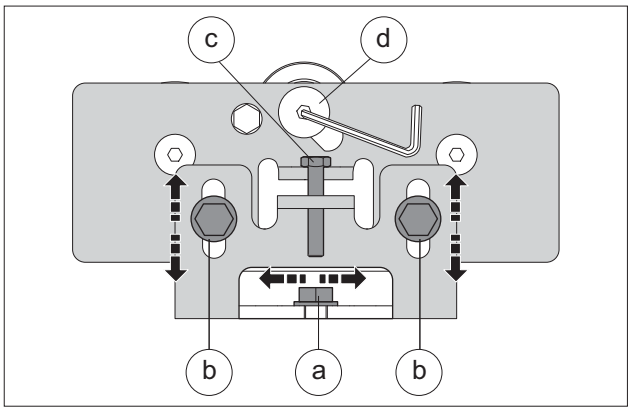

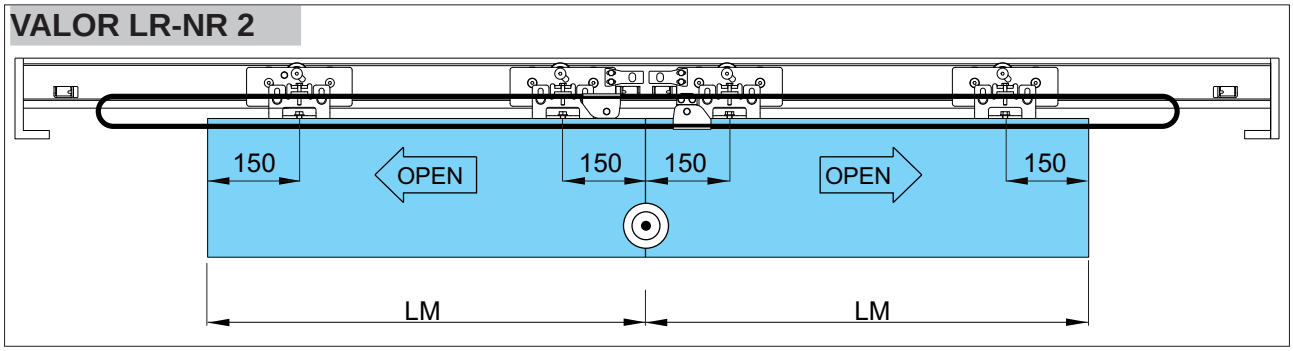

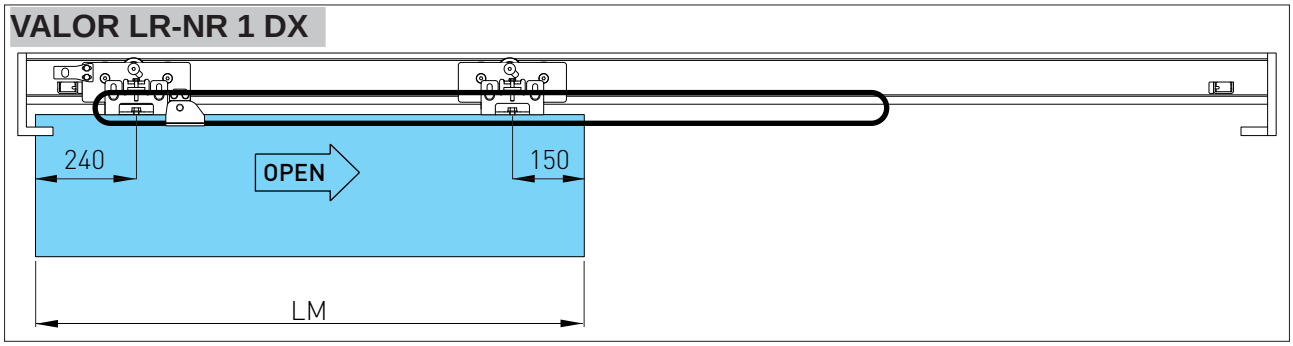

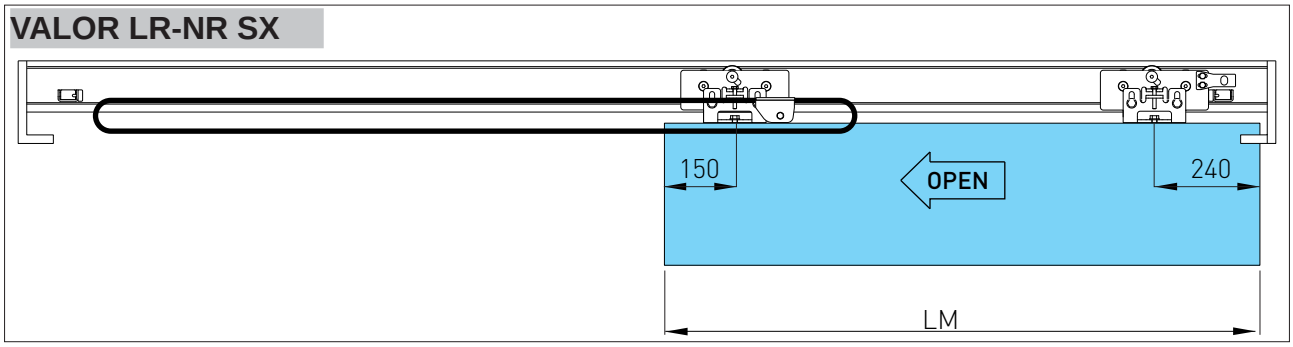

Make sure that the central wheel is adjusted [d] as illustrated in the diagram.
Fix the door wing to the carriage with screws [a].
The outer wheel of the carriage must not protrude beyond the dimension of the door wing.
Adjust the horizontal position of the door wing in accordance with the measurements indicated in diagram VALOR 2 for 2 door wing automations, VALOR 1 RH for right-hand opening automations and VALOR 1 LH for left-hand opening automations. Secure the adjustment with screws [a].
Loosen screws [b], adjust the vertical position of the door wing by means of screw [c] and fix the adjustment with screws [b].
Check, by moving the door manually, that the movement is free and without friction and that al the wheels rest on the guide.
WARNING: Leave a gap of at least 10 mm between the glass door wings when closed to avoid contact of the glass.

5.4 VALOR TR wings installation and adjustment

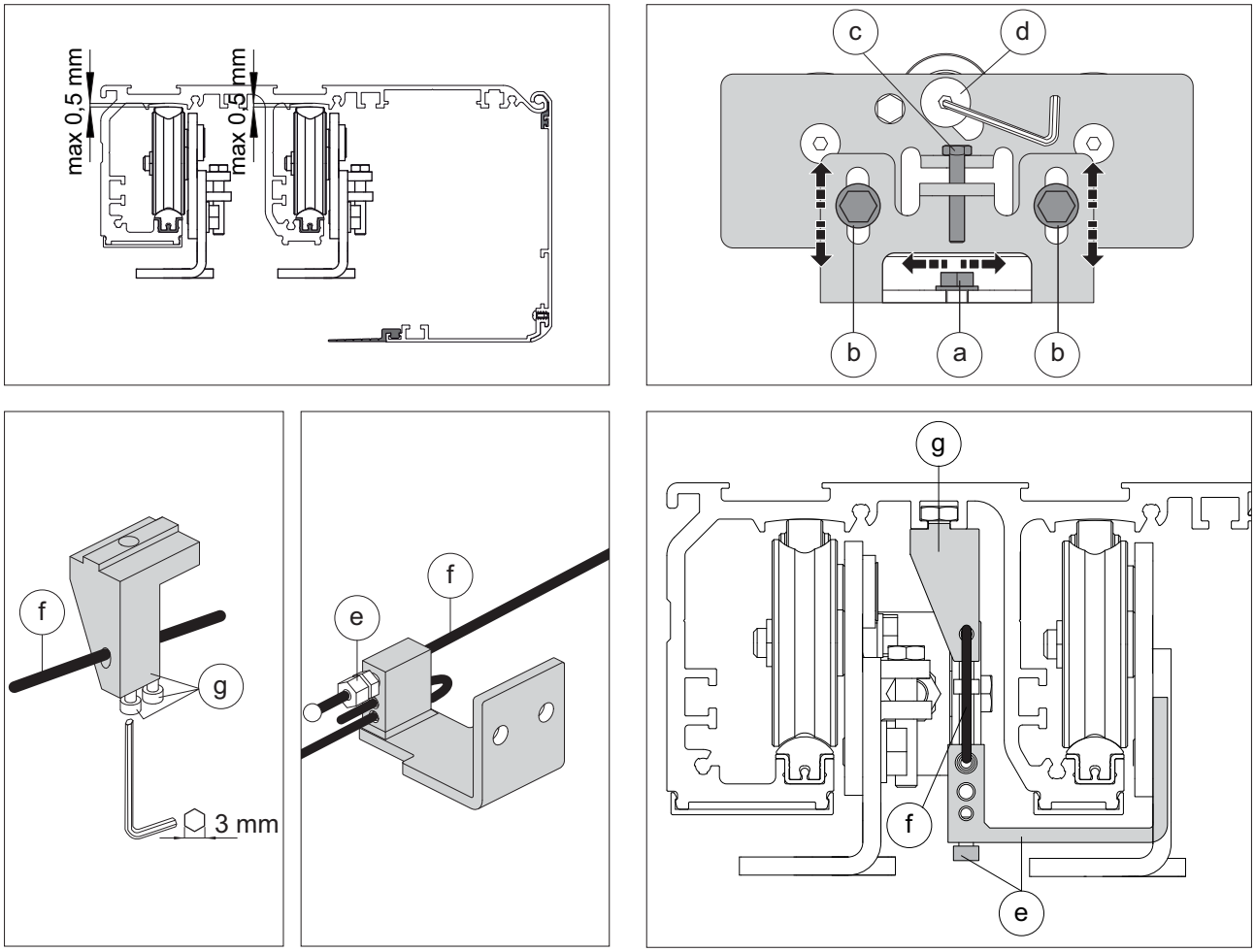

Make sure that the central wheel is adjusted [d] as illustrated in the diagram.
Fix the door wing to the carriage with screws [a].
The outer wheel of the carriage must not protrude beyond the dimension of the door wing.
Adjust the horizontal position of the door wing in accordance with the measurements indicated in diagram VALORTR 2 +2 for four door wing automations, VALORTR 1 +1 RH for right-hand opening automations and VALORTR 1 +1 LH for left-hand opening automations. Secure the adjustment with screws [a].
Loosen screws [b], adjust the vertical position of the door wing by means of screw [c] and fix the adjustment with screws [b].
Check, by moving the door manually, that the movement is free and without friction and that al the wheels rest on the guide.

Proceed as follows to adjust the overlap of the door wings:
- Place the door in the closed position.
- Hold the external door wing in the closed position.
- Loosen [g] and move the door wing, increasing or decreasing the overlap.
- Tighten [g].

Adjust the tension of the cables by means of adjuster [e], loosening the locking nut.
Correctly tension the cable, then block it with the locking nut.

VALORTR 2+2

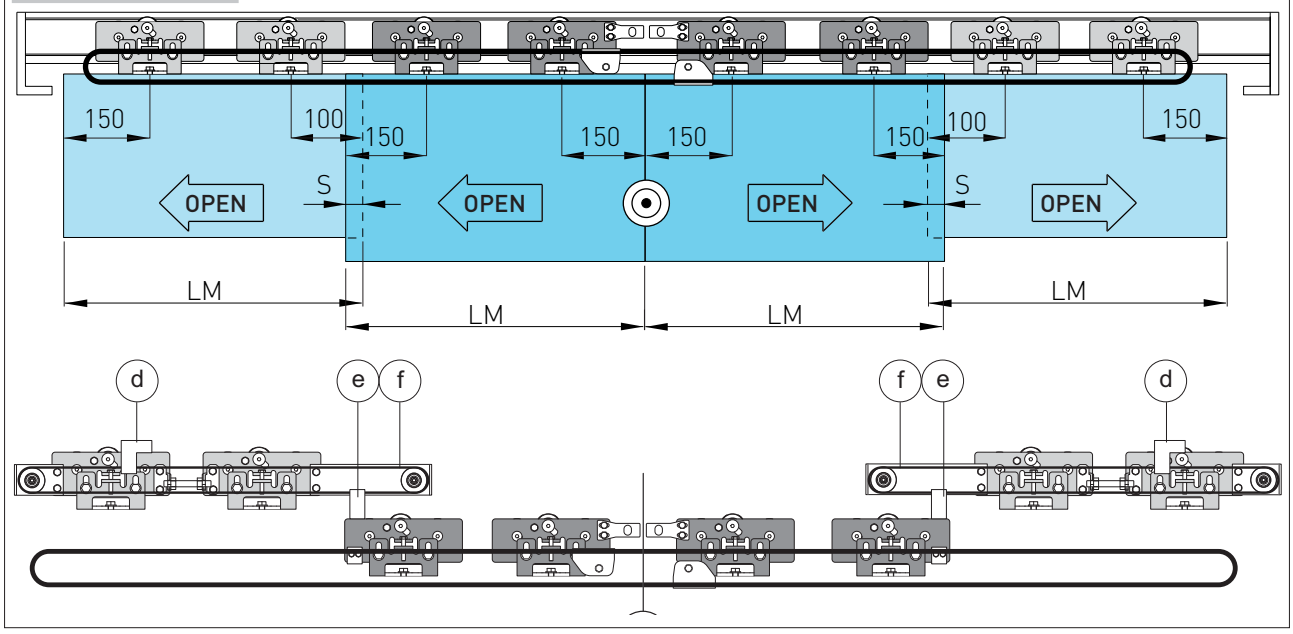

VALORTR 1+1 DX

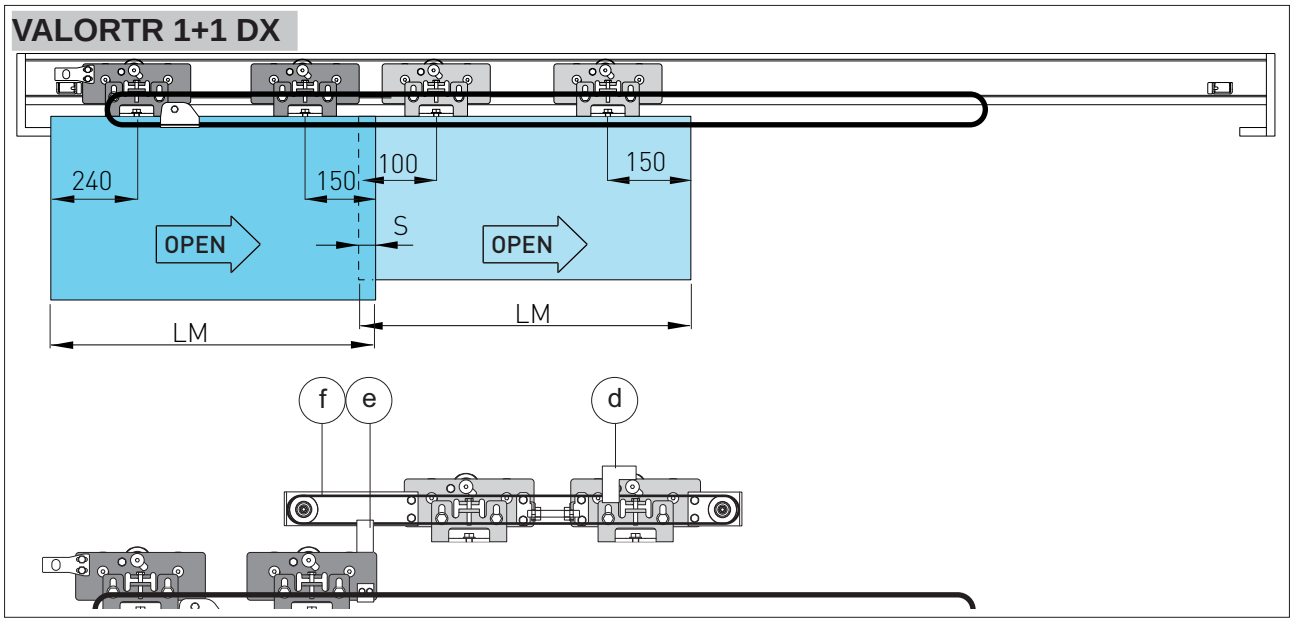

VALORTR 1+1 SX

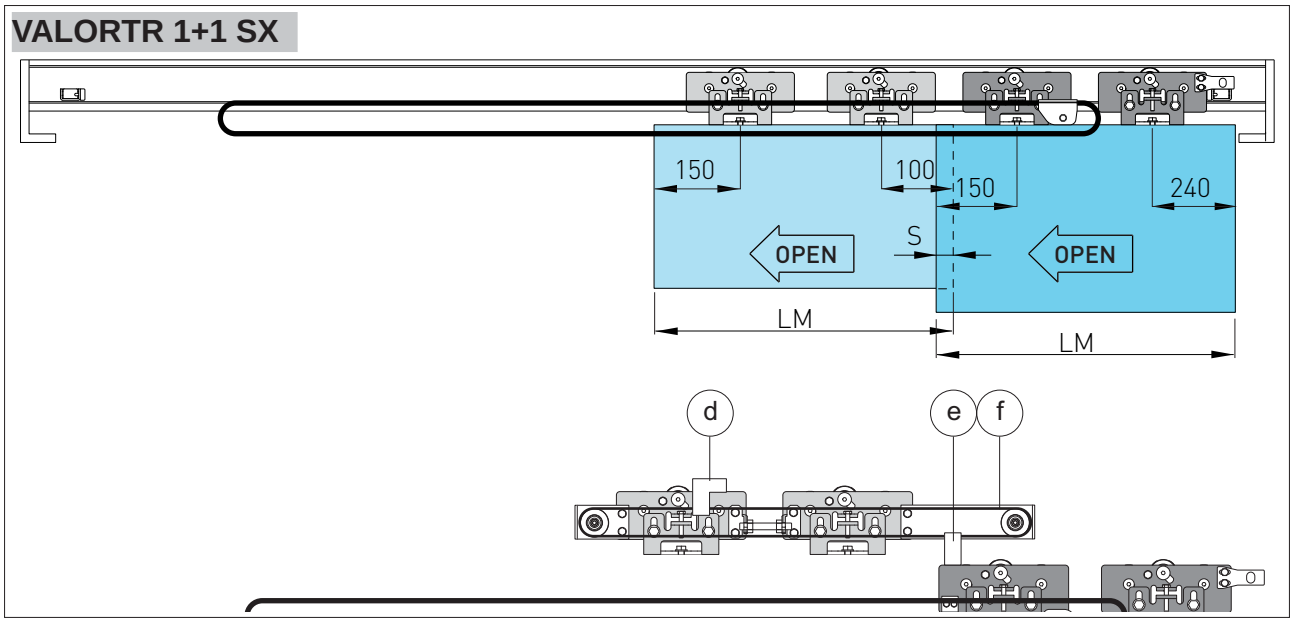

IP2089EN

3.5 Floor guide installation

The floor guides must be made of an antifriction material such as PVC, NYLON, TEFLON. The length of the floor guide should not be greater than the overlap of between the fixed and mobile door wing and must not enter the doorway.

The measurements of the code 0KP515AB floor guide for framed door wings are indicated in the diagram.

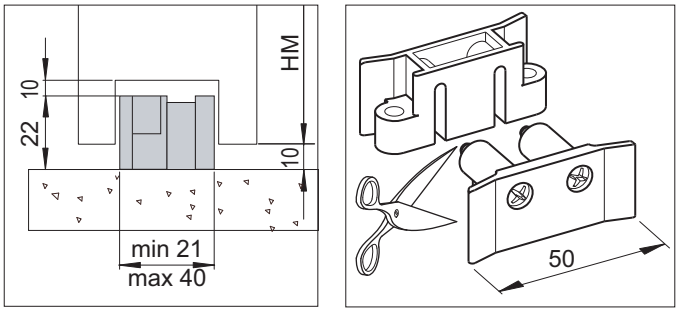

The measurements of the code 0KP369 floor guide for glass door wings are indicated in the diagram.

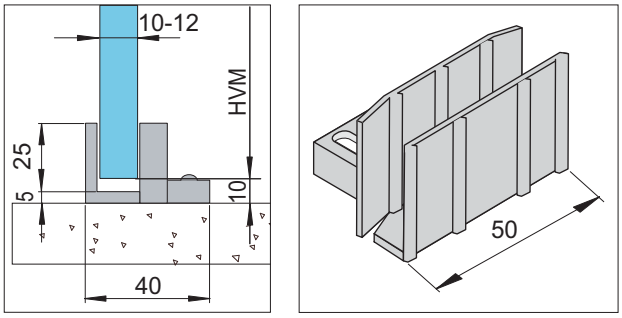

The measurements of the code KPAM35 floor guide for telescopic door wings are indicated in the diagram.

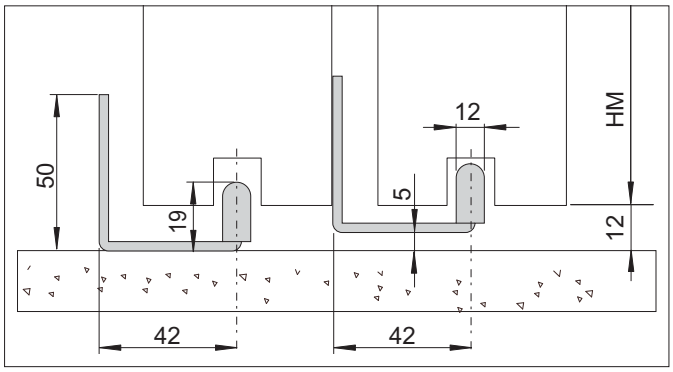

5.6 Belt adjustment

Loosen screws [a], unscrew screw [b] until the spring is at a compression of 20 mm (if the length of the automation is lower than 2600 mm) or 22 mm (if the length of the automation is greater than 2600 mm).
Block the adjustment by tightening screws [a].
WARNING: incorrect adjustment impairs the correct functioning of the automation.

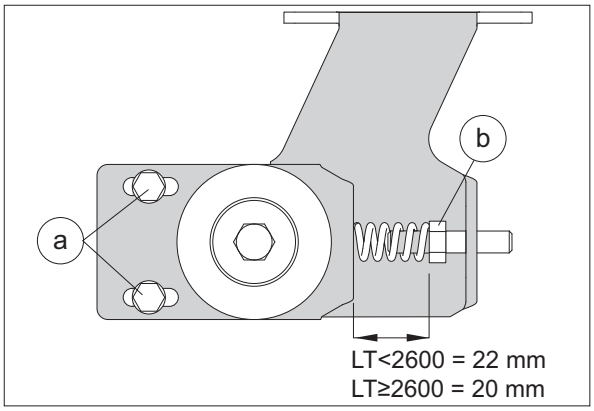

5.7 Lock device installation

Place the door wing in the closure position.
Fasten the lock device to the box profile by means of the supplied screws [a].
Align the lock pin [b] and the lock bracket [c] and manually check the correct functioning.
Slightly lubricate the lock pin and lock bracket.
For cord and microswitch installation, follow the instructions coming with the bistable device (VALLOKB) and with the release device (LOKSB).
Make the connections as shown on pages 13-14.

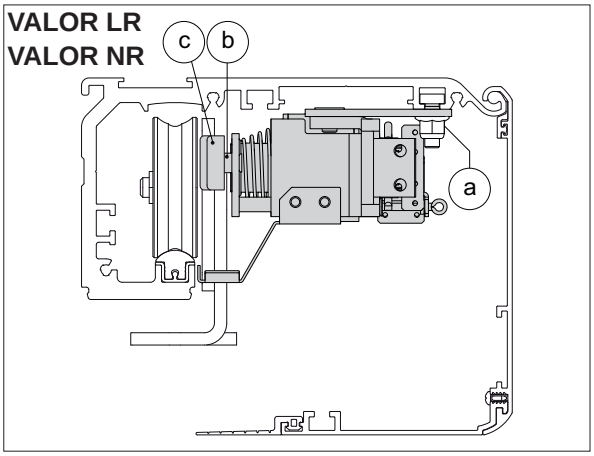

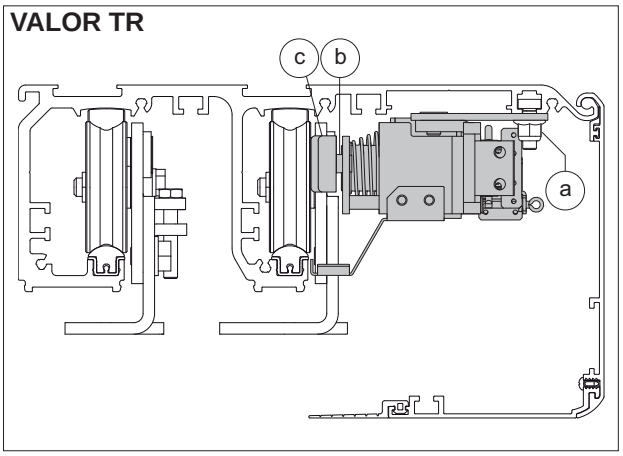

ELECTRICAL CONNECTION WITH COMER SELECTOR

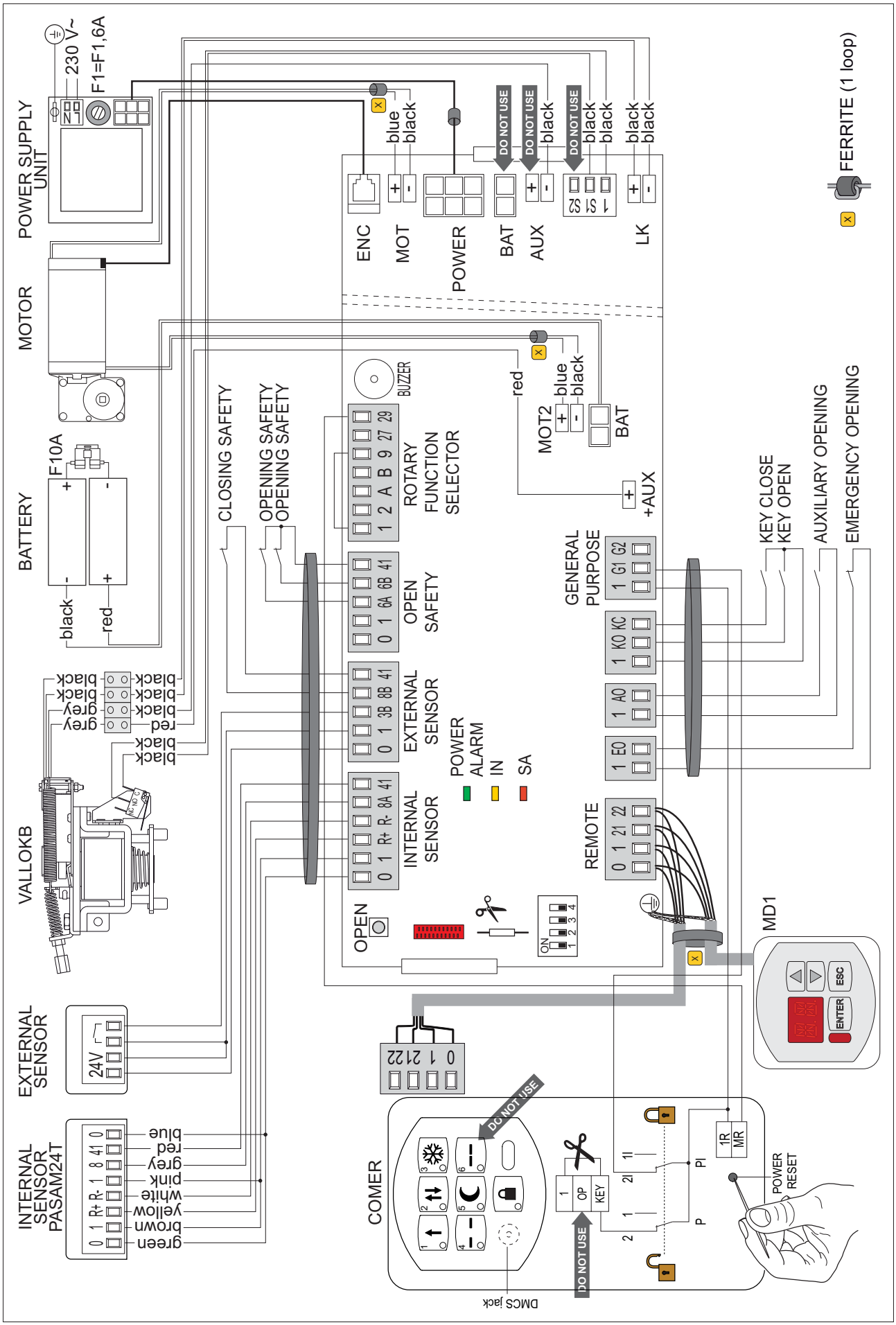

ELECTRICAL CONNECTION WITH COMKR SELECTOR

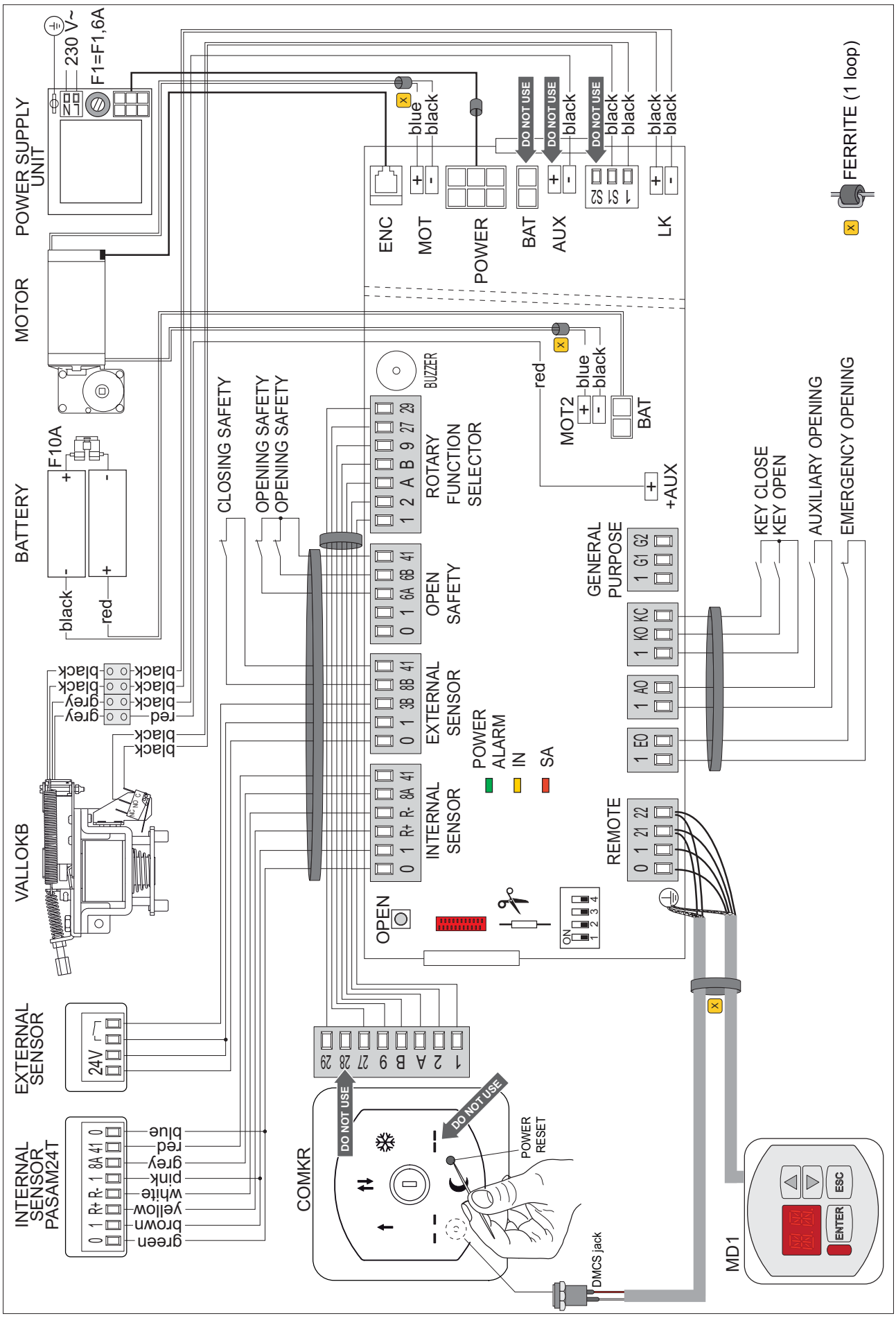

IP2089EN

6. ELECTRICAL CONNECTION

Installation, electrical connections and adjustments must be performed in accordance with Good Working Methods and in compliance with applicable regulations.

The safety devices must protect any areas where the risk exists of being crushed, cut or gragged, or where there are any other risks generated by the motorised door or gate.

Before making power connections, make sure the plate details correspond to those of the power mains. Fit an omnipolar disconnection switch with a contact opening gap of at least 3 mm. Make sure an adequate residual current circuit breaker and overcurrent cutout are fitted upstream of the electrical system.

Use a 3x1.5 mm FROR 450/750V type electric cable and connect to the terminals L (brown), N (blue), T (yellow/green) in the automation.

Secure the cable using tie-wraps or cable clamps that are not supplied.

Make sure there are no sharp edges that may damage the power supply cable.

Connection to the mains power supply, in the section outside the automation, is made with independent channels and separated from the connections to the control and safety devices.

During installation, maintenance and repair, interrupt the power supply before opening the lid to access the electrical parts.

To handle electronic parts, wear earthed antistatic conductive bracelets.

The motor manufacturer declines all responsibility in the event of component parts being fitted that are not compatible with the safe an correct operation.

WARNING: make a jumper on all N.C. contacts if not in use. The terminals with the same number are equal.

6.1 Commands

	Command		Function	Description
INTERNAL SENSOR	R+ R-		INTERNAL SIDE OPENING	Connect an autocontrolled safety sensor model PASAM24T or PASM24T (or equivalent) as explained on page 13-14 or in section 6.6. *NOTE: terminals R+/R- are a current input.*
INTERNAL SENSOR	**41** **8A**	N.C.	REVERSAL SAFETY CONTACT	The opening of the contact during the closure manoeuvre causes the movement to invert (opening).
EXTERNAL SENSOR	**1** **3B**	N.O.	EXTERNAL SIDE OPENING	The opening manoeuvre starts when the contact is closed.
EXTERNAL SENSOR	**41** **8B**	N.C.	REVERSAL SAFETY CONTACT	The opening of the contact during the closure manoeuvre causes the movement to invert (opening).
OPEN SAFETY	**41** **6A**	N.C.	LH SIDE OPENING SAFETY DEVICE	The opening speed is reduced in the last 500 mm of the door wing stroke when the contacts are opened. Presence sensors can be connected as well, as explained in section 6.7. *NOTE: advanced command management is available with the MD1 display module.*
OPEN SAFETY	**41** **6B**	N.C.	RH SIDE OPENING SAFETY DEVICE	
	1 **EO**	N.C.	EMERGENCY OPENING	The opening of the contact activates the emergency opening manoeuvre. This command is active under all conditions (also in “NIGHT” mode) and prevails over all other commands. After the contact is closed, the door will working as set by COMER or COMKR selector. *NOTE: This command can be linked to an emergency button.*
	1 **AO**	N.O.	AUXILIARY OPENING	The closing of the command activates the opening manoeuvre. If the operation as escape route is disabled, it will be re-enabled for 5 minutes (or for the time set by the display module MD1). *NOTE: This control can be combined with a magnetic board reader for automated teller machines access in case door is set to “NIGHT-TIME CLOSURE” mode.*

1 ⎯⎯⎯ KO	N.O.	KEY OPEN	The closing of the contact activates the opening manoeuvre. If the door is set to “NIGHT-TIME CLOSURE” MODE, the KEY OPEN command will carry out the opening manoeuvre and will enable the door operation for 10 s (or for the time set by the MD1 display module). *NOTE: this command can be associated with a key to allow to go out in the evening or to come back in the morning from the shop door set to “NIGHT” mode.*
1 ⎯⎯⎯ KC	N.O.	KEY CLOSE	The closing of the contact activates the closing manoeuvre. If the door is set on “NIGHT-TIME CLOSURE” mode, the KEY CLOSE command, imparted after the opening with 1-KO command, will close the door and immediately restore the “NIGHT-TIME CLOSURE” mode. *NOTE: this command can be associated with a key to allow to go out in the evening or to come back in the morning from the shop door set to “NIGHT” mode.*
1 ⎯⎯⎯ G1	N.O.	GENERAL PURPOSE	COMER function selector disabling. Make connection, as explained on page 13.
G2		GENERAL PURPOSE	FUTURE USE
1 ⎯⎯⎯ S1	N.O.	MICROSWITCH CONNECTION	Connect block microswitch as explained on pages 13-14.
OPEN	N.O.	OPENING	The opening operation is activated with a brief press.
		SETTINGS RESET	Keep the OPEN button pressed (for 4 s), until the IN LED starts to flash. To confirm the operation, press the OPEN button again for 2 seconds within 4 seconds. The SETTINGS RESET annuls all the remote software settings made via DMCS, MD1 module and COMER selector. *NOTE: We recommend carrying out the SETTING RESET during starting (see section 7), or whenever the COMER selector is replaced with COMKR selector.*

6.2 Outputs and accessories

Output	Value - Accessory	Description
0 1	24 V= / 0,5 A (max)	**Accessories power supply.** External accessories power supply output. *NOTE: the maximum absorption of 0.5 A corresponds to the sum of all terminals 1.*
REMOTE REMOTE 0 1 21 22		Allows the connection of COMER selector switches or the MD1 display for distances up to 50 m. *NOTE: use a data transmission type screened cable.* Connect the shielding to the earthing.
		For network-connected automations, cut the indicated resistance as specified in the instructions in the DMCS software manual.
ROTARY FUNCTION SELECTOR ROTARY FUNCTION SELECTOR 1 2 A B 9 27 29		It allows COMKR selector connection, as explained on page 14. COMKR selector operation is explained in the instructions for use on page 26. *NOTE: connect terminals 21-22-⏚ (REMOTE) to jack DMCS socket present in COMKR selector, using a data transmission type screened cable.*
		Storage module (BIXMR2). Allows the functioning configurations to be saved via the SF>SV function of the MD1 display module. The saved configurations can be recalled via the SF>RC function of the MD1 display module.
- MOT + - MOT2 + ENCODER		**Motor-encoder connection.** Connect double winding motor and encoder to electronic panel using the supplied cables, as explained on page 13-14.
POWER		**AL2 Feeder Connection,** as explained on pages 13-14.
+B-B	2 x 12 V / 1,2 Ah	**Anti-panic battery kit .** With the mains power supply off, the automation will carry out an opening operation at low speed. To charge the batteries, connect the mains power and the battery kit at least 30 minutes before starting the system. *WARNING: connect batteries, as explained on pages 13 and 14.*
- LK + - AUX +	24 V= / 1 A 24 V= / 200 mA	**VALLOKB bistable blocking device.** *WARNING: connect block auxiliary coil to AUX terminals, as explained on pages 13 and 14.*

6.3 Dip-switch

	Description	OFF	ON
DIP1	**Block type**	VALLOKB	No block
DIP2	**FUTURE USE**	/	/
DIP3	**Door weight**	<200 kg	>200 kg
DIP4	**FUTURE USE**	/	/

6.4 Adjustment

Make adjustments, as explained in MD1 display module manual.

6.5 Signals

LED	ON	Flashing
POWER ALARM	24 V= power supply.	Encoder / automation fault.
IN	ON during partial or total opening commands.	It flashes once each time the dip switch and COMKR selector status change.
SA	Safeties 41-6A, 41-6B and 41-8A, 41-8B open.	Safety test failure.

BUZZER	Event	Effect
	Escape route test	1 acoustic signal every second
	Alarm signalling	5 acoustic signals every minute
	COMER selector enabled	6 acoustic signals every 10 seconds

6.6 ESCAPE ROUTE SENSORS

WARNING: on sliding doors used in escape routes, the opening on the exit direction shall be controlled by an autocontrolled safety sensor model PASAM24T (or equivalent).

If you use a PASAM24T sensor, make connections as explained on pages 13-14.

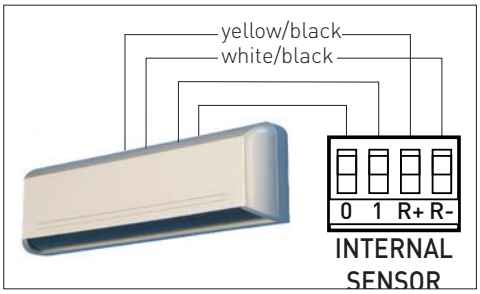

6.7 PASAT3

Autocontrolled safety devices can be connected as shown in the figure.
Set DIP10=ON on each PASAT3.

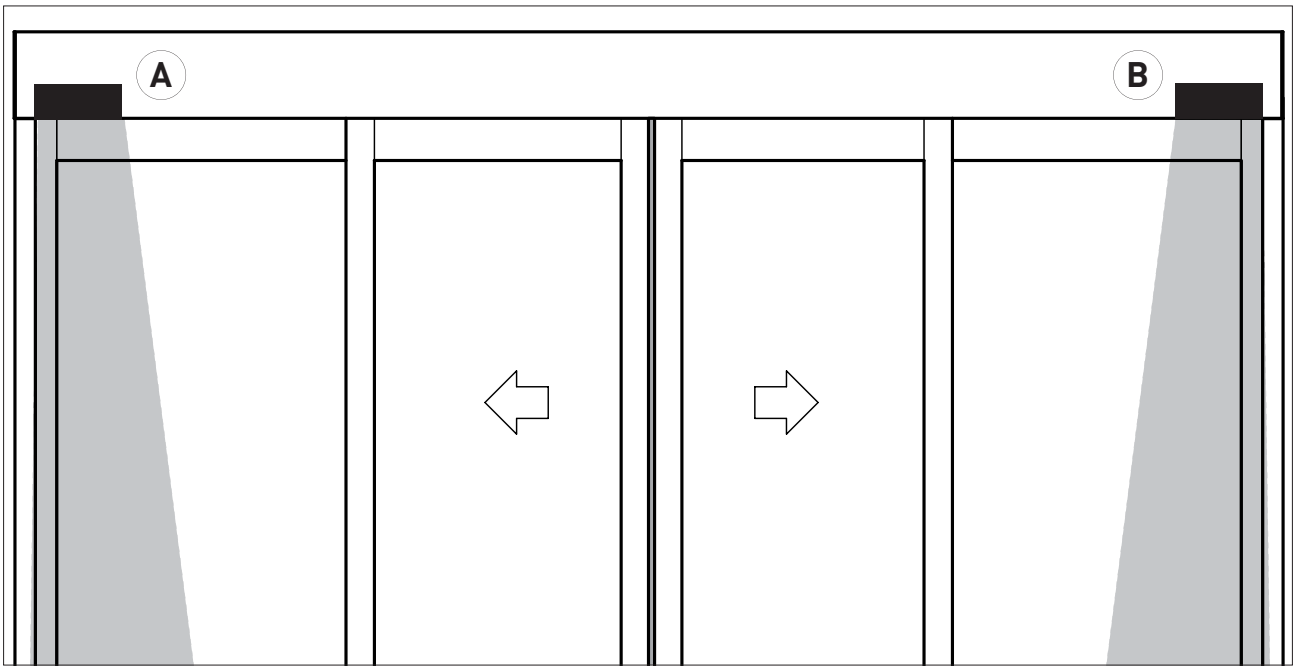

7. STARTING

- check that the connections are correct (jump all the N.C. contacts not utilised);
- check that the internal safety radar (PASM24T-PASAM24T) is correctly connected;
- check functions COMER or COMKR sensor connection;
- check MD1 display module connection;
- check batteries connection;
- turn on the power (connect the mains) and wait for 60 s for the initial autoconfiguration and for the test procedure execution;
  ATTENTION: the control panel performs an automatic POWER RESET on each start and the first opening or closing manoeuvre is performed at low speed allowing the automatic self-learning of the stop positions (acquisition);
- set SETTINGS RESET with the OPEN button as indicated in paragraph 6.1;
- set two-way operating mode using COMER selector or COMKR selector, as indicated in the instructions for use;
- check that the automation is operating correctly with further opening;
- make the desired operating setting and adjustments using the MD1 display module (as indicated in the relevant manual);
- connect possible accessories and safety devices and check they are functioning;

WARNING: pass the accessory cable through the ferrite (1 turn), as shown on page 13 or 14.

- check the operating force and that the contact force between the door and the obstacle is lower than that indicated by the DIN 18650-1 standard;
- once starting is completed, the installer shall supply all the information relating to automatic, manual and emergency operating modes of motorised door and must provide the user with the operating instructions;
- the VALOR R sliding door which was built in conformity with the prescriptions of the above-mentioned manuals, complying with the sample tested by TÜV (n. G341), is suitable for installation and used as evacuation and emergency exit, in conformity ith the European regulation DIN 18650-1 and with the German guideline AutSchR;
- the VALOR R sliding door guarantees complete opening (by sideways sliding of the doors) in all situations where power is off, and under all breakdown conditions. An escape route test (lasting about 10 seconds) is carried out every 24 hours to check working efficiency of all components.

NOTE: in case of alarms, follow the instructions given in section 9.

8. ORDINARY MAINTENANCE SCHEDULE

Perform the following operations and checks every 6 months according to intensity of use of the automation.

Power off 230 V~ and batteries:

- Clean and lubricate the moving components (especially the inside edges of the guide along which the carriages run).
- Check the tension of the belt.
- Clean sensors and photocells.
- Check for the stability of the automatism and check that all the screws are tightened all the way.
- Check that the wings are correctly aligned, that stops are properly positioned and that the lock has been correctly fitted.
- Connect the batteries

Power on 230 V~ and batteries, wait 60 s for initial auto-configuration.

- Set the desired functioning mode with COMER and COMKR selector.
- Check for the stability of the door and that the movement is steady, without friction.
- Check that the blocking system is working correctly.
- Check the operation of all command functions.
- Check the functioning of the photocells and safety devices.
- Check that the forces generated by the door comply with legal requirements.
- If the emergency opening command is present, check its good working condition.

NOTE1: Use original spare parts only for repairing or replacing products.
If control panel EL21 is replaced, the last used configuration can be restored using the SF>RL function of MD1 display module, or a configuration from the BIXMR2 storage module can be recalled using SF>RC function of MD1 display module, if previously saved.

NOTE2: In case firmware needs updating, connect DMCS device to jack DMCS socket present on the COMER or COMKR function selector.
Once these operations are completed, disconnect the DMCS device and make a POWER RESET, as specified in the instructions for use on page 26.

9. TROUBLESHOOTING

The MD1 display module displays the following alarms that have the priority on all the other displayed messages.

The following alarms cause door immediate opening.

NOTE: where indicated, perform an ALARM CLEAR to restore door operation. If it does not work, perform a POWER RESET as specified in the INSTRUCTIONS FOR USE on page 26.

DISPLAY	ALARM DESCRIPTION	INTERVENTION	POWER RESET
A0	A0 - Failed test of safety sensor installed on terminal 6.	Check the wiring and correct operation of the safety sensor.	NO
A1	A1 - Failed test of safety sensor installed on terminal 6A.	Check the wiring and correct operation of the safety sensor.	NO
A2	A2 - Failed test of safety sensor installed on terminal 6B.	Check the wiring and correct operation of the safety sensor.	NO
A3	A3 - Failed test of safety sensor installed on terminal 8.	Check the wiring and correct operation of the safety sensor.	NO
A4	A4 - Failed test of safety sensor installed on terminal 8A.	Check the wiring and correct operation of the safety sensor.	NO
A5	A5 - Failed test of safety sensor installed on terminal 8B.	Check the wiring and correct operation of the safety sensor.	NO
A7	A7 - Incorrect connection between terminal 9 and terminal 41	Connect contact 1-9 as explained in paragraph 6.2.	NO
B0	B0 - Batteries almost run down	Leave door powered until automatic reset.	NO
B1	Replace batteries	Leave door powered until automatic reset. Replace batteries.	NO
B3	B3 - No battery	Check battery wirings. Check battery fuse.	NO
E0	E0 - Encoder failure	Replace the encoder. Check control panel operation.	YES
E2	E2 - Motor or encoder leads reversal	Check motor wiring. Check encoder wiring.	YES
E3	E3 - Encoder not connected / Encoder failure	Check encoder wiring. Replace encoder. Check control panel operation.	YES
F0	F0 - Abnormal overspeed detection	Check control panel operation.	YES
F1	F1 - No door wings closing due to test performance	Check for the presence of obstacles or friction. Check photocells or presence sensor activation. Check control panel operation.	YES
F2	F2 - No door wings opening	Check for the presence of obstacles or friction. Check control panel operation.	YES
G0	G0 - Emergency Open command activation	Check that 1-EO contact is closed.	NO
I0	I0 - Emergency Open Input Failure	Check control panel operation.	YES

TEAR OFF AND DELIVER TO USER

IP2089EN

DISPLAY	ALARM DESCRIPTION	INTERVENTION	POWER RESET
I2	I2 - No inner bus communication	Check control panel operation.	NO
I3	I3 - Internal radar input failure	Check control panel operation.	YES
I4	I4 - Factory initialisation incomplete	Check control panel operation.	NO
IC	IC - Operation time-out error	Check control panel operation.	YES
IG	IG - Motor drive fault	Check control panel operation.	YES
IH	IH - Motor currents fault	Check control panel operation.	YES
IL	IL - “Escape route” stage electronic failure	Check control panel operation.	YES
L0	L0 - Door wings release failed	Check block and microswitch wiring. Check microswitch operation. Check block movement. Check control panel operation..	YES
L1	L1 - Door wings locking failed	Check block and microswitch wiring. Check microswitch operation. Check block movement. Check control panel operation.	YES
L2	L2 - Block coil short circuit	Check block wiring. Check block operation.	YES
L3	L3 - Auxiliary coil disconnected	Check block wiring. Check block operation.	YES
E2	L4 - Main coil disconnected	Check block wiring. Check block operation.	YES
M4	M4 - Motor short circuit	Check MOT wiring. Check motor operation. Check control panel operation.	YES
MB	MB - No motor	Check MOT wiring. Check motor operation. Check control panel operation.	YES
P0	P0 - No mains voltage.	Check power supply wiring. Check mains voltage availability.	NO
S0	S0 - Block settings error	Check DIP1 setting on control panel. Check contact inside 1-S1 microswitch.	YES
S3	S3 - Operating mode setting error	Check the mode set on COMER or COMKR selector.	NO
S4	S4 - Mechanical selector (COMER only) connection error or failure	Check selector wiring. Replace selector.	YES
S7	S7 - Contact (COMER only) connection failure	Check that KEY contacts on COMER and 1-G1 on control panel are both connected and are simultaneously enabled/disabled.	YES

TEAR OFF AND DELIVER TO USER

IP2089EN

DISPLAY	ALARM DESCRIPTION	INTERVENTION	POWER RESET
S9	S9 - KEY CLOSE command permanently closed	Check wiring of contact 1-KC.	NO
T0	T0 - Motor test failure	Check MOT wiring. Check motor operation. Check door wing flowability. Check control panel operation	YES
T1	T1 - Motor 2 test failure	Check MOT2 wiring. Check motor operation. Check door wing flowability. Check control panel operation.	YES

The following alarms do not cause door opening:

DISPLAY	ALARM DESCRIPTION	INTERVENTION	POWER RESET
F0	F0 - Abnormal overspeed detection	Check for any outer interference / mechanical actions onto door wings. Check control panel operation	NO
M3	M3 - Door blocked	Check any mechanical friction.	NO
M8	M8 - Door size error / transmission failure – Door is too long.	Check door wing stroke. Check belt and driving system.	YES
M9	M9 - Door dimension error - Door too short.	Check any mechanical friction.	NO
MA	MA - Stop exceed error	Check limit stop. Check belt tensioning	NO
S8	S8 - COMER enabled	Disable selector by means of a key. Check that KEY contacts wiring on COMER is correct.	NO
V0	V0 - Request for maintenance intervention.	Proceed with the routine maintenance intervention.	NO

TEAR OFF AND DELIVER TO USER

IP2089EN

10. USER INSTRUCTIONS

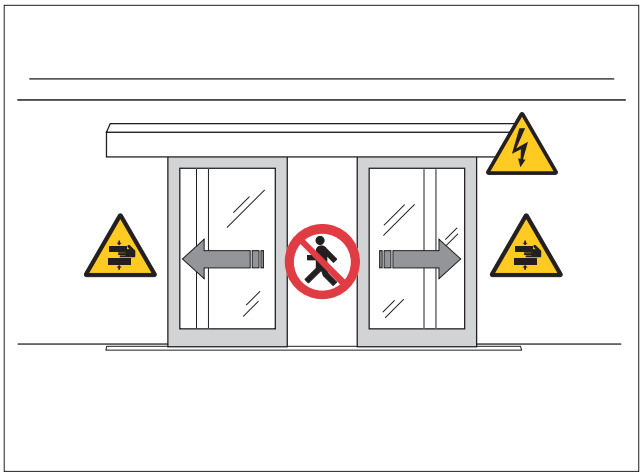

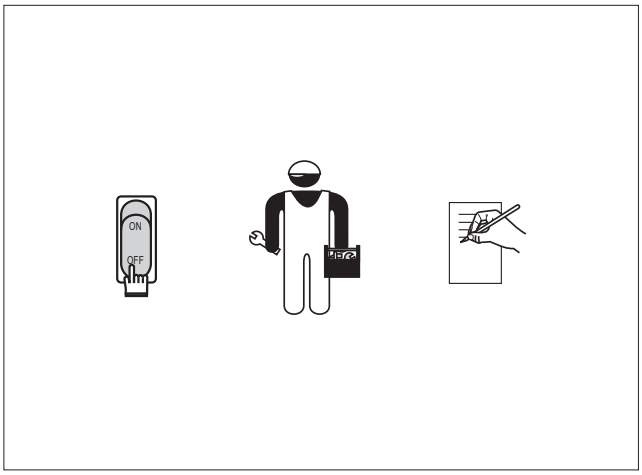

10.1 General safety precautions

The following precautions are an integral and essential part of the product and must be supplied to the user. Read them carefully as they contain important indications for the safe installation, use and maintenace.
These instruction must be kept and forwarded to all possible future user of the system.
This product must be used only for that which it has been expressely designed.
Any other use is to be considered improper and therefore dangerous.
The manufacturer cannot be held responsible for possible damage caused by improper, erroneous or unresonable use.
Avoid operating in the proximity of the hinges or moving mechanical parts.
Do not enter the field of action of the motorised door while in motion.
Do not obstruct the motion of the motorised door as this may cause a situation of danger.
Do not lean against or hang on to the door when it is moving.
Do not allow children to play or stay within the field of action of the motorised door.
Keep remote control or any other control devices out of the reach of children, in order to avoid possible involuntary activation of the motorised door. In case of break down or malfunctioning of the product, disconnect from mains, do not attempt to repair or intervene directly and contact only qualified personnel.
Failure to comply with the above may create a situation of danger.
All cleaning, maintenance or repair work must be carried out by qualified personnel.
In order to guarantee that the system works efficiently and correctly it is indispensable to comply with the manufacturer's indications thus having the periodic maintenance of the motorised door carried out by qualified personnel.
In particular regular checks are recommended in order to verify that the safety devices are operating correctly.
All installation, maintenance and repair work must be documented and made available to the user.
For the correct disposal of electric and electronic equipment, waste batteries and accumulators, the user must take such products to the designated municipal collection facilities.

TEAR OFF AND DELIVER TO USER

IP2089EN

10.2 Manual release instructions

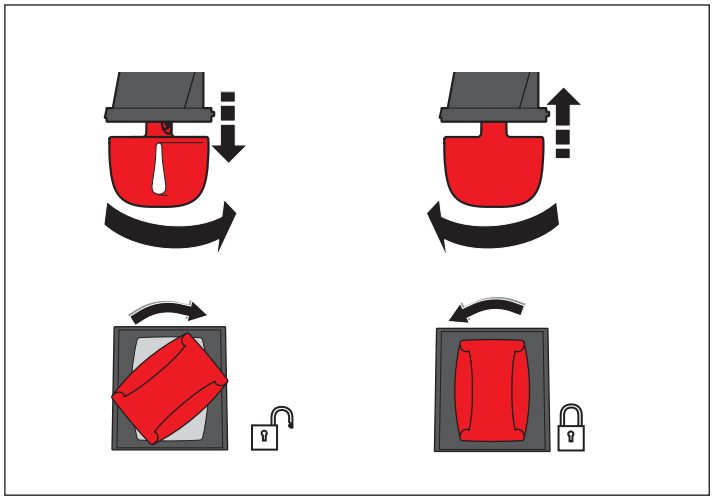

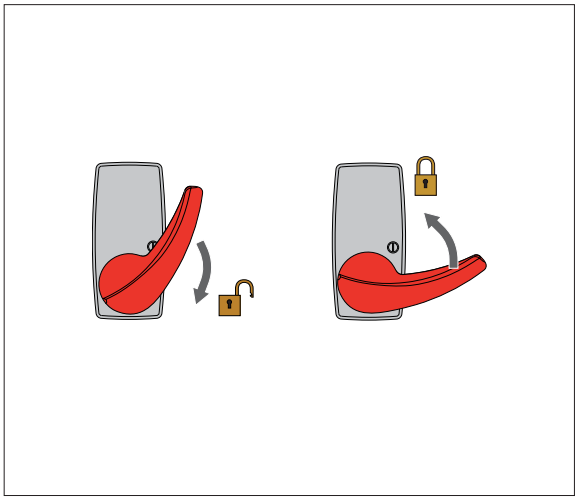

In the event of maintenance, malfunctioning or emergency, pull the lock release lever VALSB down and turn it to the right or lower the lock release lever LOKSBM (if installed) and move the door wings manually into the open position.
To block the door wings again, reposition the lock release lever to the initial position

WARNING: carry out the door wing blocking and release with the motor switched off.

10.3 Escape route test

To start test, carry out the POWER RESET.
During escape route test (lasting about 10 s), the door makes some automatic movements.
The escape route test is automatically repeated every 24 hours (or the time set by the MD1 display module), starting from the last test carried out.
NOTE: escape route test is carried out on the following occasions: upon every start (see section 7), with the POWER RESET, and when you quit the NIGHT-TIME CLOSURE mode after at least 4 hours.

TEAR OFF AND DELIVER TO USER

IP2089EN

11. FUNCTION SELECTOR USER INSTRUCTION

FUNCTION SELECTOR	COMER	COMKR
DOOR OPEN The door opens and remains open.		
TOTAL ONE-WAY OPENING For one-way operation from the inner side of the door.		
TOTAL TWO-WAY OPENING For two-way door operation.		
PARTIAL OPENING For two-way, one-way and partial opening operation.		
DOOR CLOSE - DO NOT USE The door closes and remains closed and locked (if lock is present). *WARNING: MD1 display module displays S3 alarm.*		
NIGHT-TIME CLOSURE Door closes after a 10 s operation to allow authorised door management authorised staff to get out before it closes. *NOTE: with the COMER selector, operation can be extended to 60 s, while with COMKR selector operation can be set from MD1 display module.* The NIGHT-TIME CLOSURE mode allows closing the door also when an alarm is present, except when the emergency opening 1-EO contact is open. *WARNING: door operation as escape route is disabled.*		
ALARM CLEAR The ALARM CLEAR can be activated by temporarily selecting the NIGHT-TIME CLOSURE mode and then reselecting the current mode. *WARNING: in case of alarm (see section 9), when envisaged, a POWER RESET shall be performed to restore door operation.*		
POWER RESET It deletes the acquired data and after 3 s the door carries out the ESCAPE ROUTE TEST, and makes a new acquirement. *WARNING: in case of alarm (see section 9), when envisaged, a POWER RESET shall be performed to restore door operation.*	POWER RESET	POWER RESET
DMCS Jack This is used to connect the DMCS software. *NOTE: The DMCS jack can be accessed by removing the function selector switch cover.*	DMCS jack	DMCS jack
SELECTOR DISABLED Red LED on. (COMER) Compulsory position during operation. *WARNING: during door operation as escape route, COMER or COMKR selector shall be disabled, key shall be removed, and the set operating mode shall be TWO-WAY, ONE-WAY or OPEN DOOR.* *Any other setting of the selector may affect escape route operation, and can be selected by authorised staff only, when the use conditions allow it.*		
COMER SELECTOR ENABLED It allows selecting the desired function. *WARNING: after having selected the desired function, disable selector in order not to display the S8 alarm on the MD1 display module.*		

TEAR OFF AND DELIVER TO USER

IP2089EN

If necessary, cut and apply near the functions selector switch.

SYMBOL	MEANING	DESCRIPTION
– –		DOOR OPEN The door opens and remains open.
↑		TOTAL ONE-WAY OPENING For one-way operation from the inner side of the door.
↑↓		TOTAL TWO-WAY OPENING For two-way door operation.
☾		NIGHT-TIME CLOSURE Door closes to allow to get out before it closes.

ENABLING DOOR OPERATION			– – ↑ ↑↓	
DISABLING DOOR OPERATION			☾	

ALARM RESET			☾	– – ↑ ↑↓	ALARM CLEAR	

IP2089EN

IP2089EN

ASSA ABLOY Entrance Systems AB
Lodjursgatan 10
SE-261 44, Landskrona
Sweden